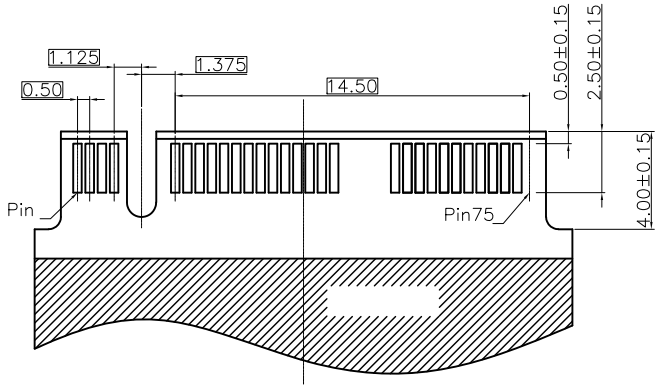

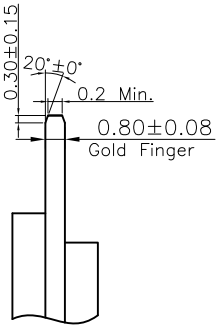

Recommended Mould Finger Layout
Default Tolerance ±0.05

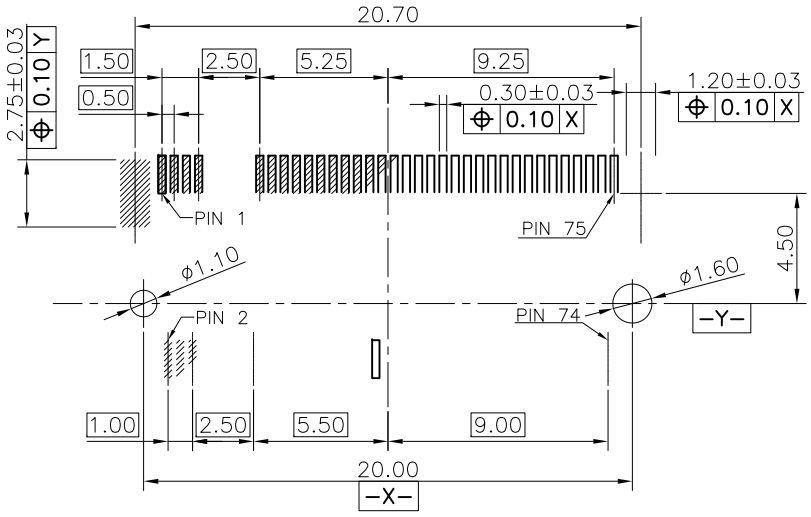

Default Tolerance ±0.05